UNIVERSITY OF GLASGOW

Degrees of MEng, BEng, MSc and BSc in Engineering

ROBOTICS 4 (ENG4118)

Tuesday 3rd May 2022
2:00 – 4:00 PM

Attempt ANY TWO questions from SECTION A
and ANY TWO questions from SECTION B

Total 60 marks

The numbers in square brackets in the right-hand margin indicate the marks allotted to the part of the question against which the mark is shown. These marks are for guidance only.

An electronic calculator may be used provided that it does not have a facility for either textual storage or display, or for graphical display.

Continued overleaf

SECTION A: [30 Marks]
Attempt ANY TWO questions from this section

Q1 (a) Explain what *span*, *accuracy*, and *error* are with respect to sensors. Provide an example for each. [6]

(b) You are developing a maze following robot and you need to provide a sensor suite that provides non-contact methods of detecting the walls. Recommend two different sensors, providing justification for your choices. [4]

(c) An absolute encoder is used to detect the position of a spinning motor.

(i) Explain the basic working principle of an absolute encoder. A figure can be used. [3]

(ii) Given the encoder has 10 tracks, what is the angular resolution that can be achieved? (work to 3 decimal places) [2]

Q2 (a) Explain what an H-Bridge is and provide a description, with appropriate diagrams, of how the H-Bridge works. [7]

(b) Briefly explain what pneumatics are in relation to robotic actuation and provide a diagram of a basic pneumatic system with a short description of each of the *major* components within the diagram. [8]

Q3 (a) There is a requirement for a joint on a robotic manipulator to travel to 50º from an initial position of 10º, in 10s. Assuming zero initial and final velocities and adopting a polynomial position reference solution, calculate the necessary polynomial coefficients and provide the final equations. Calculate the initial acceleration. [8]

(b) It has subsequently been found that the actuator can only produce an initial acceleration of 1.5º/sec2. Calculate the new polynomial position reference to satisfy this additional constraint. Provide the final equations. [7]

Continued overleaf

SECTION B: [30 Marks]
Attempt ANY TWO questions from this section

Q4. A spherical robot manipulator is employed as part of an industrial process. This process requires the manipulator to position its end-effector at two separate coordinates. These are shown in Table Q4a:

Coordinate	First Position	Second Position
Px	1.5	6.5
Py	0.7	5.9
Pz	3.9	1.2

Table Q4a

(a) By considering basic translational and rotational transformation matrices, prove that the kinematics of a spherical manipulator can be represented by the following transformation matrix:

$$T_{SPH} = \begin{bmatrix} 1 & 0 & 0 & R.S\beta C\gamma \\ 0 & 1 & 0 & R.S\beta S\gamma \\ 0 & 0 & 1 & R.C\beta \\ 0 & 0 & 0 & 1 \end{bmatrix}$$ [2]

(b) Calculate all viable joint variable solutions for the spherical manipulator at each of the two positions described in Table Q4a above. [7]

(c) The spherical manipulator's joints are controlled by different controllers. Table Q4b shows the different joint controller types and their associated design parameters.

Joint	Controller Type	Controller Design Parameters
R	Proportional & Integral	Critical gain, $K_c = 7.5$ Critical Period, $T_c = 0.6$s
β and γ	Proportional, Integral & Derivative	Slope = 8.5°/s Lag = 0.25s

Table Q4b

Calculate the gains for each of the joint controllers using these parameters and an appropriate *Ziegler-Nichols* tuning method. [3]

(d) Hence or otherwise, derive the controller equations for each of the joint controllers presented in Table Q4b. [3]

Continued overleaf

Q5. Figure Q5 depicts a floor mounted robot manipulator with a conical tool fitted as part of the end-effector. The manipulator consists of 3 revolute joints (joints 1, 4 and 5) and 2 prismatic joints (joints 2 and 3). Specific dimensions of the robot are labelled ***a*** - ***f*** and angles **α** - **γ**. The length of the link connecting joints 2 and 3 is ***c*** and the link is inclined at 45° to the horizontal. The link connecting joints 4 and 5 is perpendicular to the axis of rotation for joint 4 and in-line with the axis of rotation for joint 5.

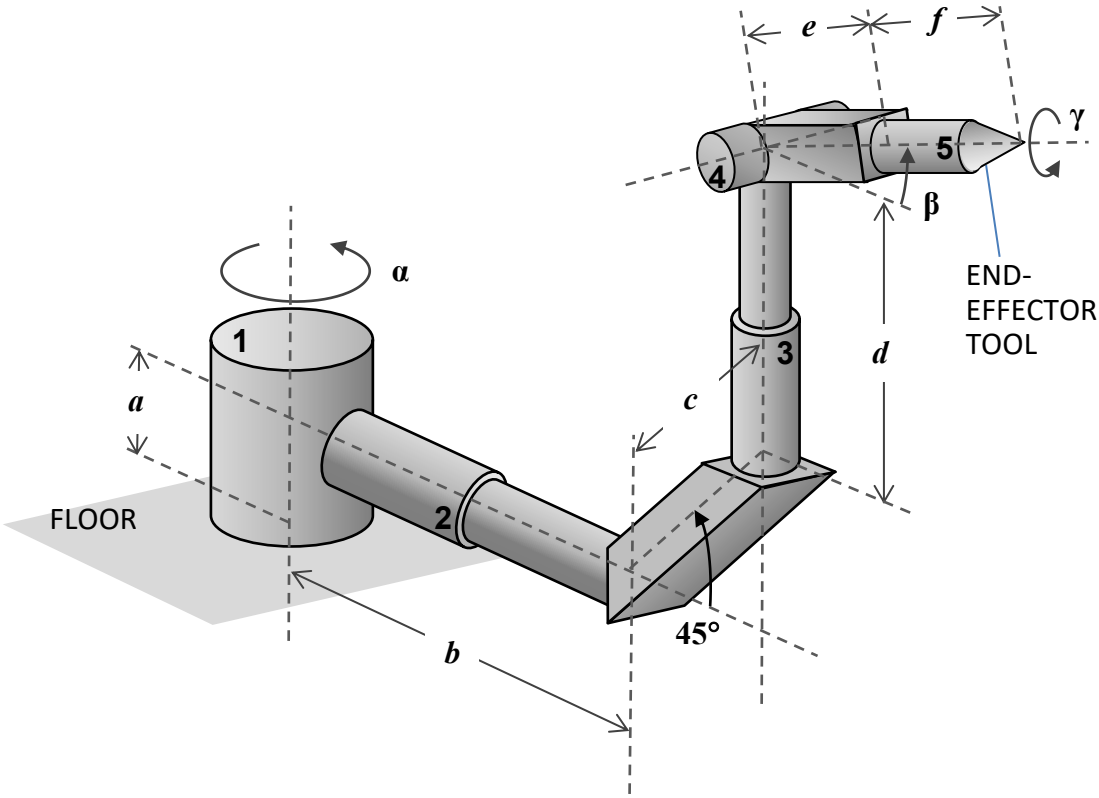

Figure Q5

(a) By considering basic transformation matrices, derive the *Denavit-Hartenberg Transformation Matrix*. [2]

(b) Using the *Denavit-Hartenberg Kinematic Representation*, define the position and orientation of appropriate x-z axes for the manipulator shown in Figure Q5. Illustrate your answer with an appropriate diagram showing these x-z axes. [3]

(c) Hence or otherwise, construct the *Denavit-Hartenberg Table* associated with the x-z axes defined in part (b). [3]

(d) Using the *Denavit-Hartenberg Transformation Matrix* and the table constructed in part (c), derive the kinematic transformation matrix ${}^{U}T_{H}$ for the manipulator end-effector tool shown in Figure Q5. [7]

Continued overleaf

Q6. Table Q6a represents the *Denavit-Hartenberg Parameter Table* for a particular robot manipulator with successive joints numbered 1 to 6.

# (type)	θ	d	a	α
1 (revolute)	39°	0.45m	0.15m	90°
2 (revolute)	127°	0	0	90°
3 (prismatic)	0°	0.52m	0	90°
4 (revolute)	127°	0	0.17m	90°
5 (prismatic)	0	0.17m	0	0°
6 (revolute)	55°	0.10m	0	0°

Table Q6a

Using the joint and link values given in Table Q6a, derive the T6 Jacobian for the robot manipulator's end-effector.

[15]

End of question paper